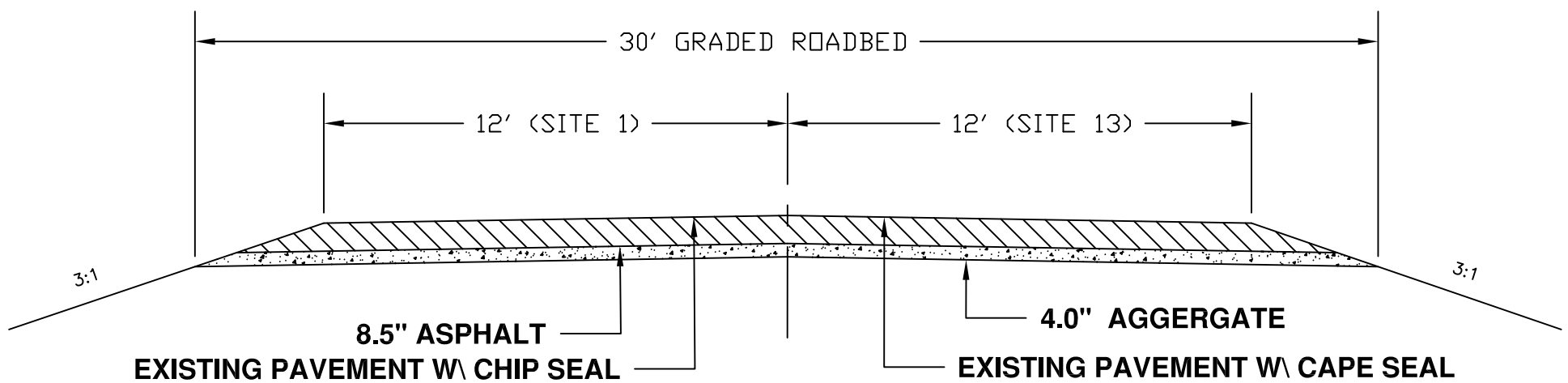

NOT TO SCALE

CASS COUNTY HIGHWAY DEPARTMENT
C-9 ARRA TEST PROJECT
SITE 1 & SITE 13

J:\Admin-Eng\Projects\C9 ARRA Demo\ARRA Demo Cross Sections.dwg

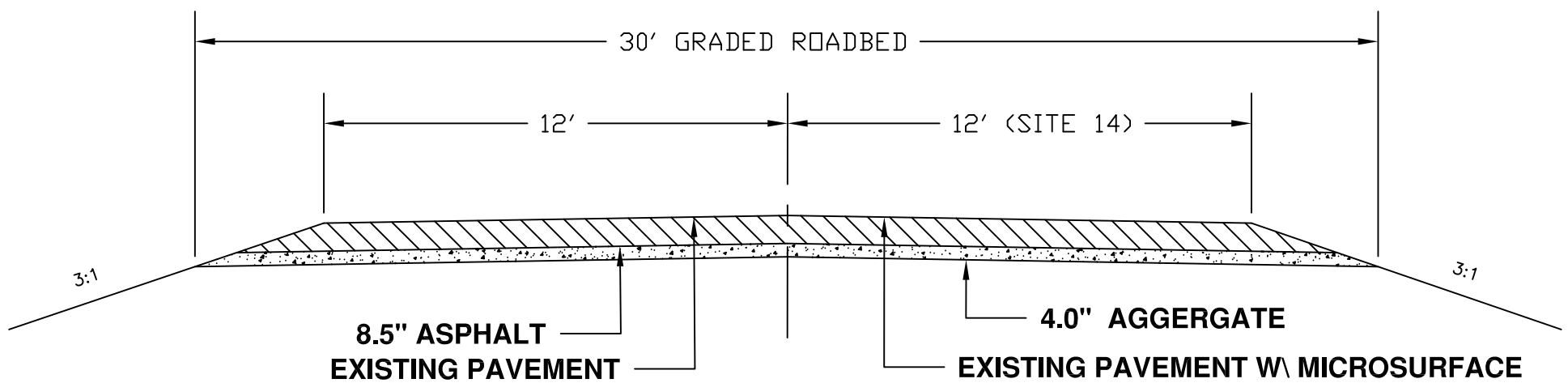

NOT TO SCALE

CASS COUNTY HIGHWAY DEPARTMENT
C-9 ARRA TEST PROJECT
SITE 14

J:\Admin-Eng\Projects\C9 ARRA Demo\ARRA Demo Cross Sections.dwg

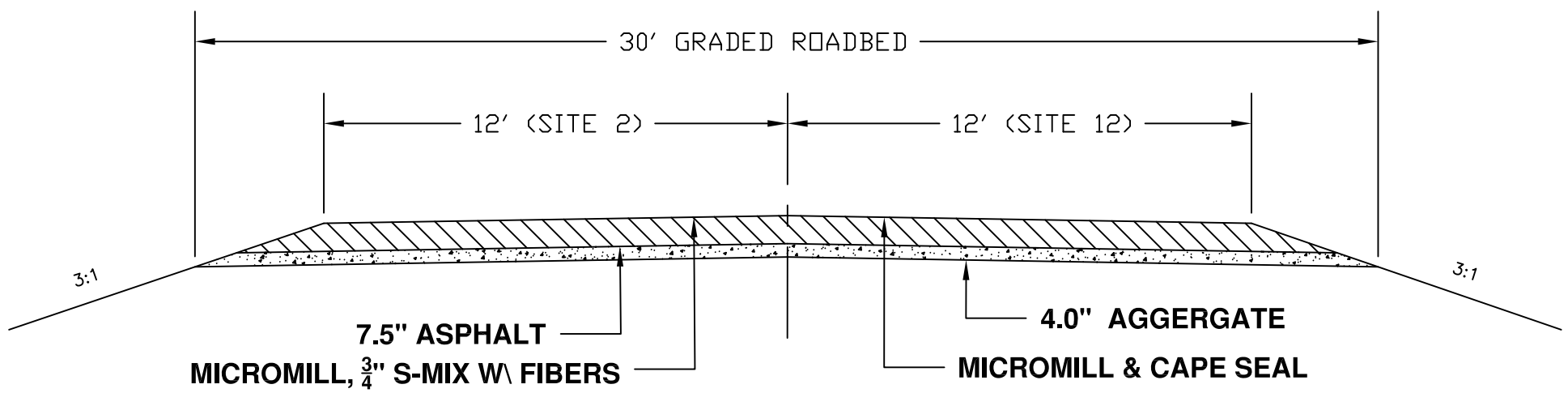

NOT TO SCALE

CASS COUNTY HIGHWAY DEPARTMENT
C-9 ARRA TEST PROJECT
SITE 2 & SITE 12

J:\Admin-Eng\Projects\C9 ARRA Demo\ARRA Demo Cross Sections.dwg

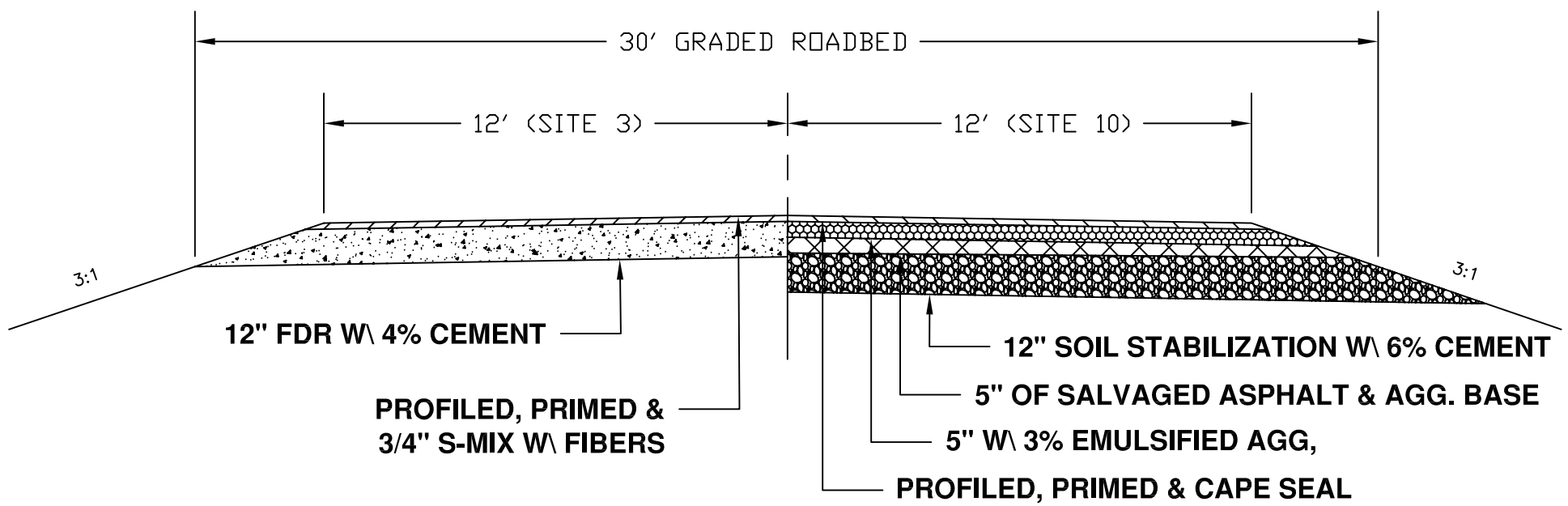

NOT TO SCALE

CASS COUNTY HIGHWAY DEPARTMENT
C–9 ARRA TEST PROJECT
SITE 3 & SITE 10

J:\Admin-Eng\Projects\C9 ARRA Demo\ARRA Demo Cross Sections.dwg

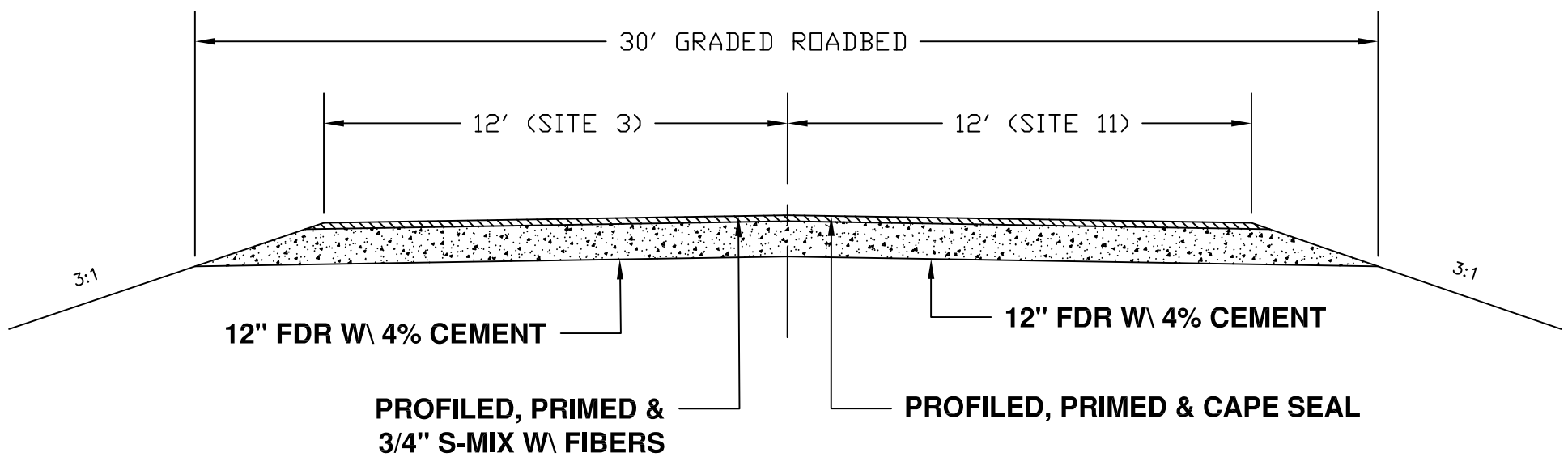

NOT TO SCALE

CASS COUNTY HIGHWAY DEPARTMENT
C-9 ARRA TEST PROJECT
SITE 3 & SITE 11

J:\Admin-Eng\Projects\C9 ARRA Demo\ARRA Demo Cross Sections.dwg

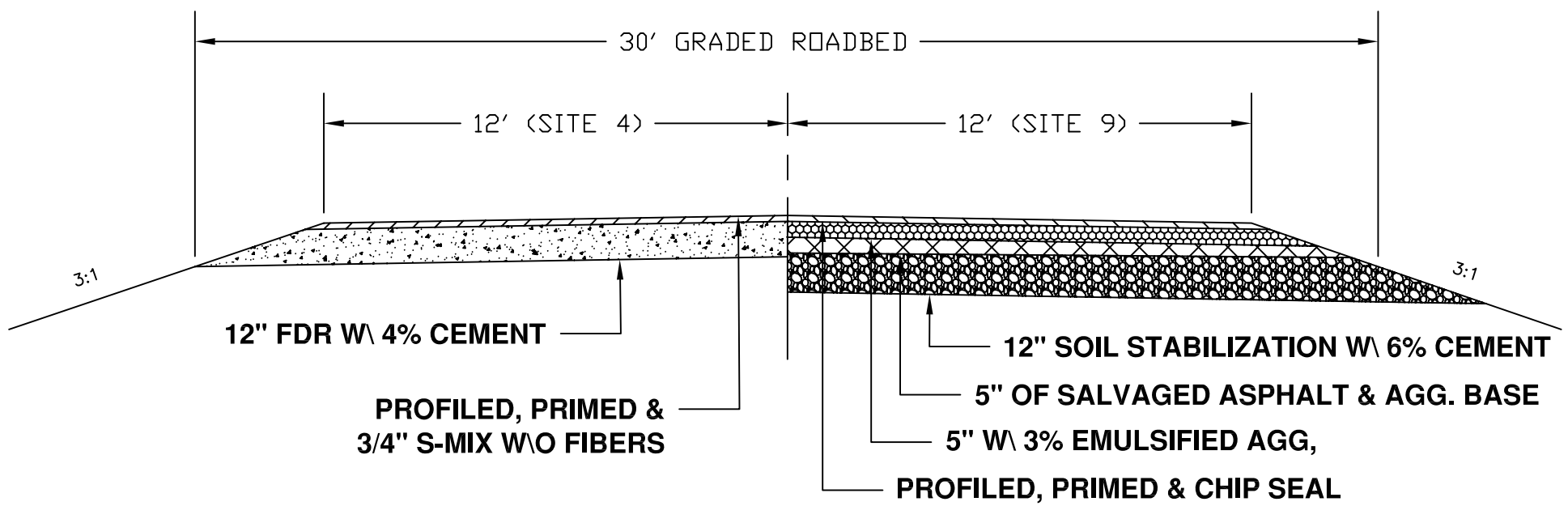

NOT TO SCALE

CASS COUNTY HIGHWAY DEPARTMENT
C-9 ARRA TEST PROJECT
SITE 4 & SITE 9

J:\Admin-Eng\Projects\C9 ARRA Demo\ARRA Demo Cross Sections.dwg

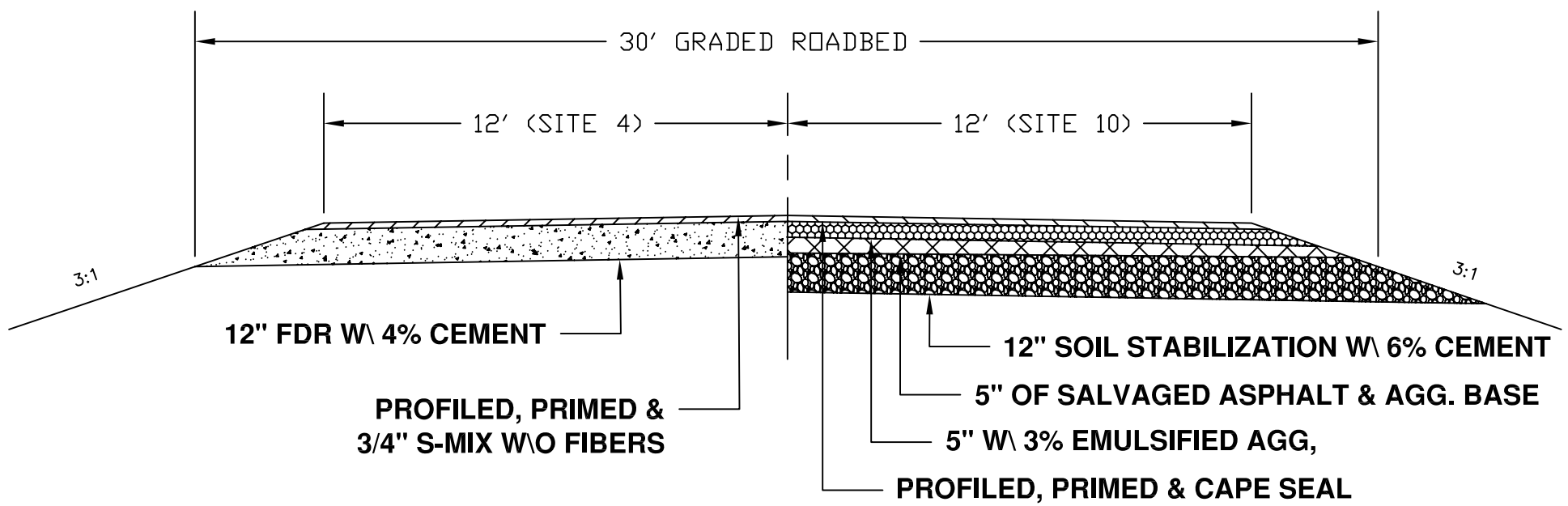

NOT TO SCALE

CASS COUNTY HIGHWAY DEPARTMENT
C-9 ARRA TEST PROJECT
SITE 4 & SITE 10

J:\Admin-Eng\Projects\C9 ARRA Demo\ARRA Demo Cross Sections.dwg

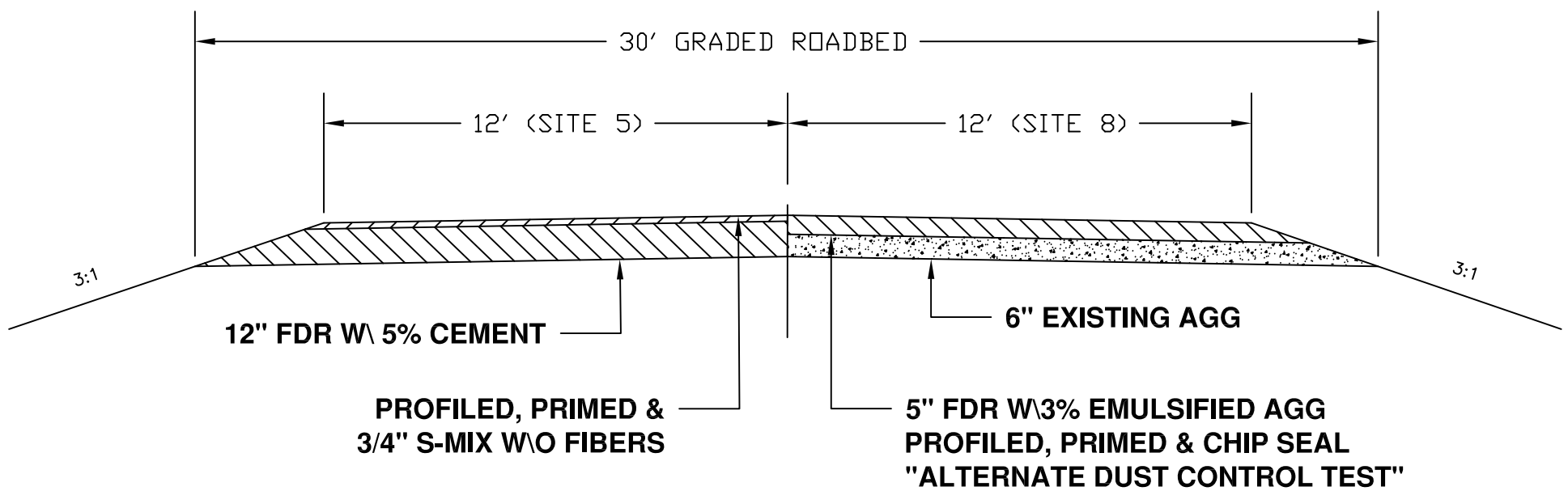

NOT TO SCALE

CASS COUNTY HIGHWAY DEPARTMENT
C-9 ARRA TEST PROJECT
SITE 5 & SITE 8

J:\Admin-Eng\Projects\C9 ARRA Demo\ARRA Demo Cross Sections.dwg

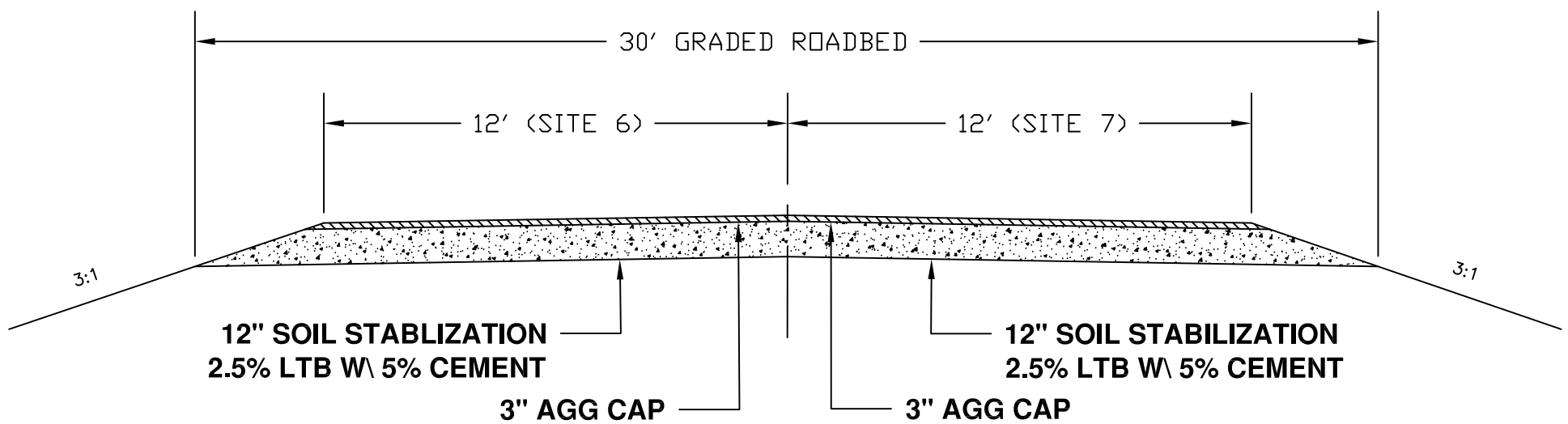

NOT TO SCALE

CASS COUNTY HIGHWAY DEPARTMENT
C-9 ARRA TEST PROJECT
SITE 6 & SITE 7

J:\Admin-Eng\Projects\C9 ARRA Demo\ARRA Demo Cross Sections.dwg